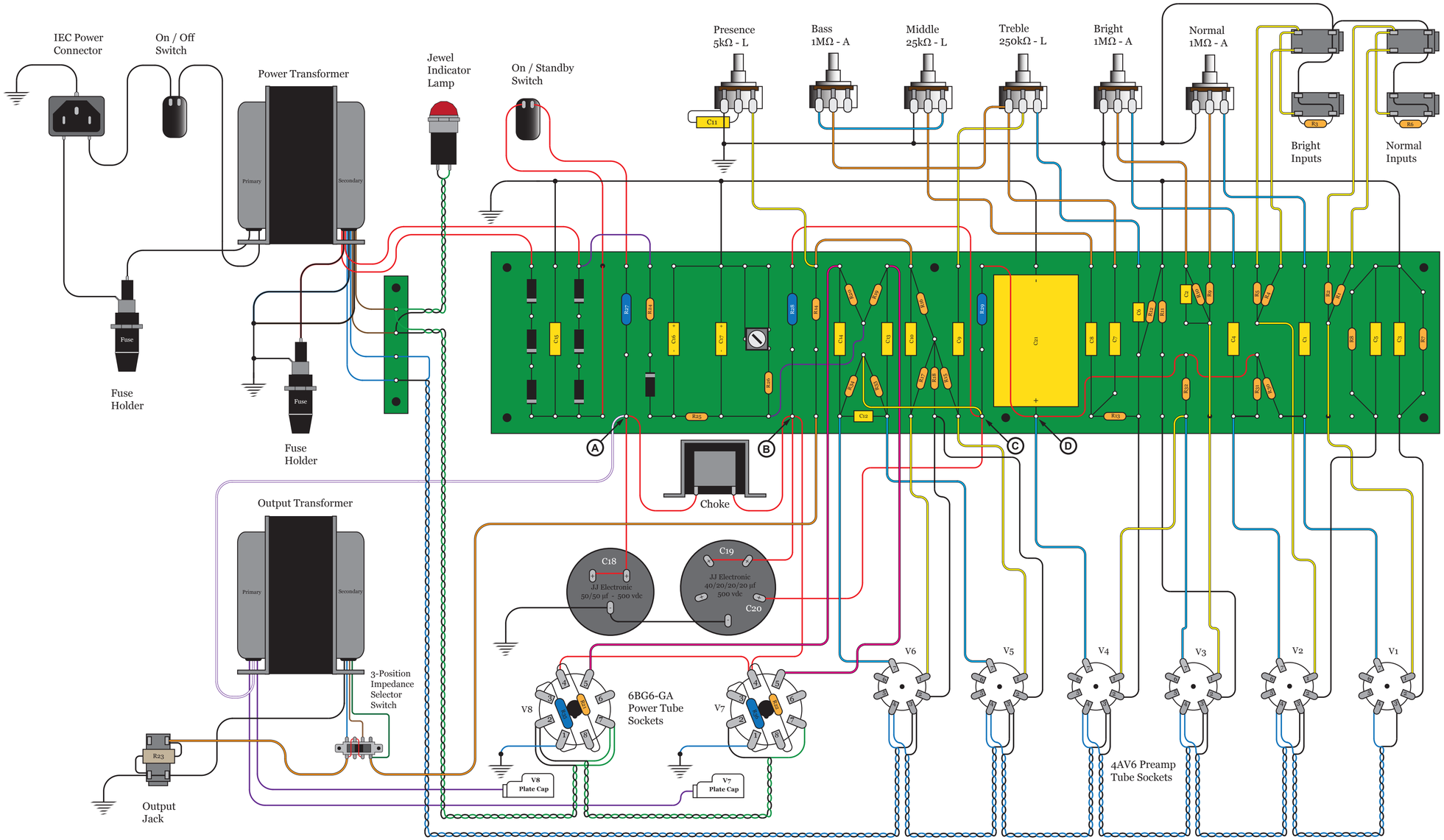Dragonfly Amplification
Layout Diagram for
"Blues Monster" model
created by Kevin Morde
Date: 11/30/2012